BALLUFF

BTL5-A/C/E/G_ _-M/U_ _ _ _-P-S 32/KA_ _

english Technical Description
User's Guide

Balluff GmbH
Schurwaldstrasse 9
73765 Neuhausen a.d.F.
Germany
Phone +49 (0) 71 58/1 73-0
Fax +49 (0) 71 58/50 10
Servicehotline +49 (0) 71 58/1 73-3 70
E-Mail: balluff@balluff.de
http://www.balluff.de

Contents

1 Safety Advisory 2
1.1 Proper application 2
1.2 Qualified personnel 2
1.3 Use and inspection 2
1.4 Scope 2

2 Function and Characteristics 3
2.1 Characteristics 3
2.2 Function 3
2.3 Available stroke lengths and magnets 3

3 Installation 3
3.1 Transducer installation 3
3.2 Floating magnets 4
3.3 Captive magnets 5

4 Wiring 6

5 Startup 7
5.1 Check connections 7
5.2 Turning on the system 7
5.3 Check output values 7
5.4 Check functionality 7
5.5 Fault conditions 7
5.6 Noise elimination 7

6 Versions (indicated on part label) 7

7 Technical Data 8
7.1 Dimensions, weights, ambient conditions 8
7.2 Supply voltage (external) 8
7.3 Outputs 8
7.4 Connection to processor 8
7.5 Included in shipment 8
7.6 Magnets (order separately) 8
7.7 Accessories (optional) 8

The following patents have been granted in connection with this product:

US Patent 5 923 164
Apparatus and Method for Automatically Tuning the Gain of an Amplifier

1 Safety Advisory

Read this manual before installing and operating the Micropulse Transducer.

1.1 Proper application

The BTL5 Micropulse transducer is intended to be installed in a machine or system. Together with a controller (PLC) or a processor (BTA) it comprises a position measuring system and may only be used for this purpose.

Unauthorized modifications and non-permitted usage will result in the loss of warranty and liability claims.

1.2 Qualified personnel

This guide is intended for specialized personnel who will perform the installation and setup of the system.

1.3 Use and inspection

The relevant safety regulations must be followed when using the transducer system. In particular, steps must be taken to ensure that should the transducer system become defective no hazards to persons or property can result. This includes the installation of additional safety limit switches, emergency shutoff switches and maintaining the permissible ambient conditions.

1.4 Scope

This guide applies to the model BTL5-A/C/E/G...P... Micropulse transducer.

An overview of the various models can be found in ➥ section 6 Versions (indicated on part label) on page 7.

Note: *For special versions, which are indicated by an -SA_ _ _ designation in the part number, other technical data may apply (affecting calibration, wiring, dimensions etc.).*

The CE Mark verifies that our products meet the requirements of EC Directive

89/336/EEC (EMC Directive)

and the EMC Law. Testing in our EMC Laboratory, which is accredited by DATech for Testing Electromagnetic Compatibility, has confirmed that Balluff products meet the EMC requirements of the following Generic Standards:

EN 50081-2 (emission)

EN 61000-6-2 (noise immunity)

Emission tests:
RF Emission
EN 55011 Group 1, Class A
Noise immunity tests:
Static electricity (ESD)
EN 61000-4-2 Severity level 3
Electromagnetic fields (RFI)
EN 61000-4-3 Severity level 3
Fast transients (Burst)
EN 61000-4-4 Severity level 3
Surge
EN 61000-4-5 Severity level 2
Line-induced noise induced by high-frequency fields
EN 61000-4-6 Severity level 3
Magnetic fields
EN 61000-4-8 Severity level 4

2 Function and Characteristics

2.1 Characteristics

Micropulse transducers feature:

— Very high resolution, repeatability and linearity
— Immunity to shock, vibration, contamination and electrical noise
— An absolute output signal
— IP 67 per IEC 529

2.2 Function

The Micropulse transducer contains a tubular waveguide enclosed by an extruded aluminum housing. A magnet attached to the moving member of the machine is moved across the top of the housing and its position constantly updated.

The magnet defines the measured position on the waveguide. An internally generated INIT pulse interacts with the magnetic field of the magnet to generate a magnetostrictive torsional wave in the waveguide which propagates at ultrasonic speed.

The torsional wave arriving at the end of the waveguide is absorbed in the damping zone. The wave arriving at the beginning of the waveguide creates an electrical signal in the coil surrounding the waveguide. The propagation time of the wave is used to derive the position. Depending on the version the corresponding value is output as a voltage or a current either with rising or falling characteristic. This process takes place with measuring high precision and repeatability within the stroke range defined as nominal stroke length.

On both ends of the nominal stroke length is an area which provides an unreliable signal, but which may be entered.

The electrical connection between the transducer, the processor/controller and the power supply is via a cable, which depending on the version is either fixed or connected using a female connector.

Dimensions for installing the Micropulse transducer and for the magnets and control arm are found on ➥ pages 4 and 5.

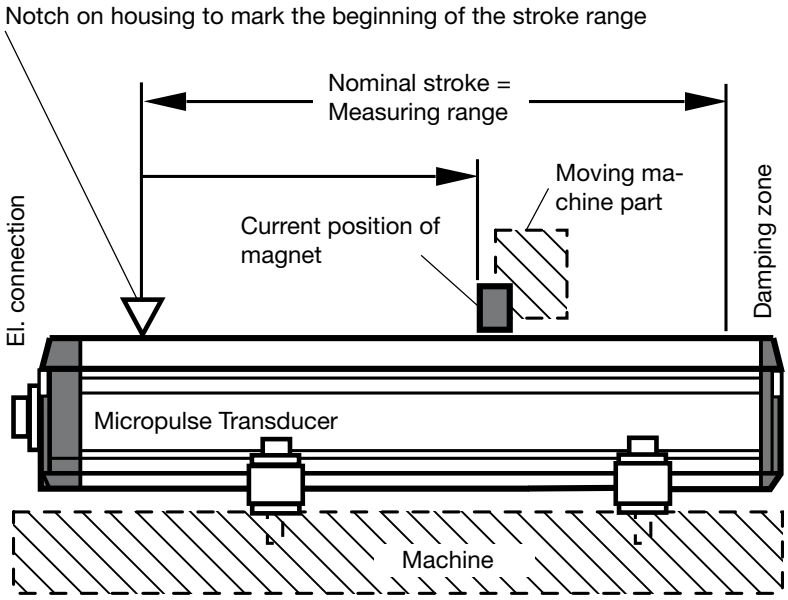

Fig. 2-1: Basic arrangement

2.3 Available stroke lengths and magnets

To provide for optimum fit in any application, a wide range of standard stroke lengths and magnets in various form factors are available. Magnets and control arms must therefore be ordered separately.

The following nominal stroke lengths are available:

stroke lengths [mm]			increments [mm]
50	...	1000	50
1000	...	2000	100
2000	...	4000	250

Other stroke lengths on request.

3 Installation

3.1 Transducer installation

Ensure that no strong electrical or magnetic fields are present in the immediate vicinity of the transducer.

Any orientation is permitted. The supplied mounting brackets and cylinder head screws allow the transducer to be mounted on a flat machine surface. A sufficient quantity of mounting brackets is supplied. These should be evenly spaced (➥ Figs. 3-1 and 3-5). The recommended spacing for long transducers and extreme conditions (e.g. strong shock or vibration): A = 80 mm; spacing between the individual brackets B = 250 mm.

The supplied isolation bushings are used to electrically insulate the transducer from the machine (➥ Fig. 3-1and 3-5 and chapter 5.6 Noise elimination).

The Micropulse transducer in profile housing is suitable both for floating, i.e. non-contacting magnets (➥ Page 4) and for captive magnets (➥ Page 5).

3 Installation (cont.)

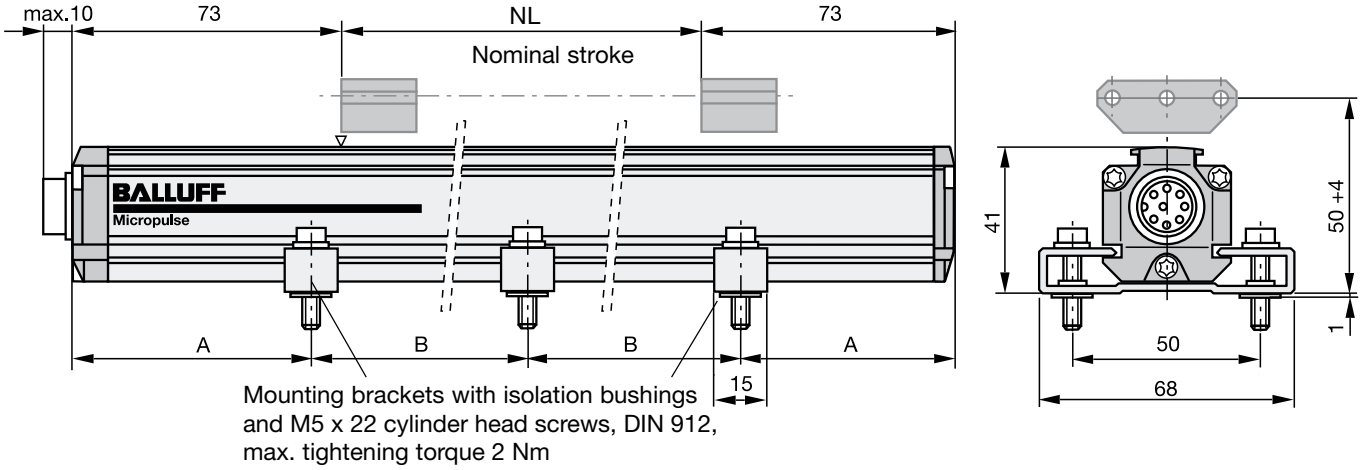

Fig. 3-1: Dimensional drawing (BTL5...P-S 32 transducer with floating magnet BTL5-P-3800-2)

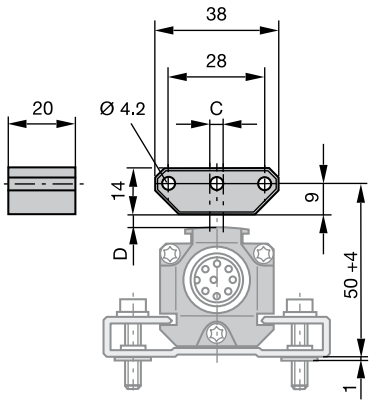

Fig. 3-2: BTL5-P-3800-2 magnet

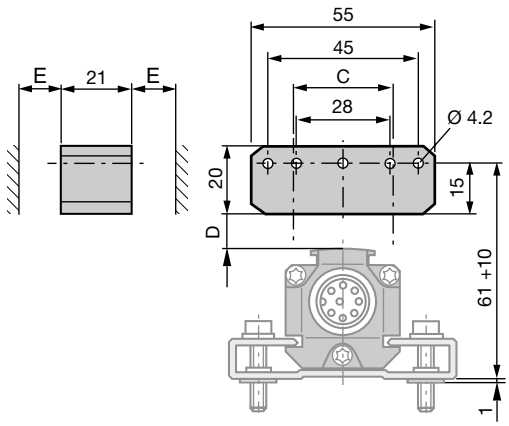

Fig. 3-3: BTL5-P-5500-2 magnet

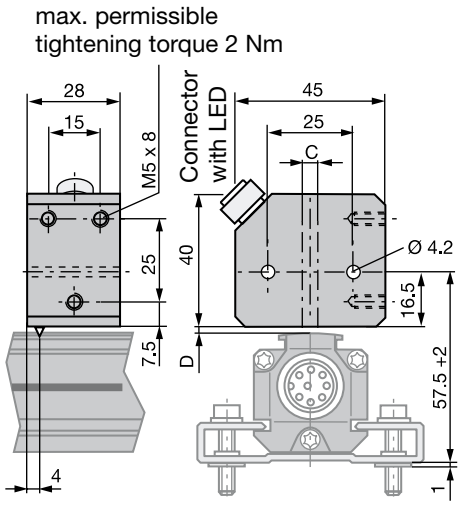

Fig. 3-4: BTL5-P-4500-1 electromagnet (24 V/100 mA)

3.2 Floating magnets

The floating magnet (➥ Figs. 3-2 to 3-4) is attached to the moving member of the machine using non-magnetizable screws (brass, aluminum). To ensure the accuracy of the transducer system, the moving member must carry the magnet on a track parallel to the transducer.

The following table provides figures in [mm] for the spacing which must be maintained between magnet and transducer and for the permissible center offset:

Magnet type	Distance " D "	Offset " C "
BTL5-P-3800-2	0.1 ... 4	± 2
BTL5-P-5500-2	5 ... 15	± 15
BTL5-P-4500-1	0.1 ... 2	± 2

⚠ *Ensure that the distance E between parts made of magnetizable material and the BTL5-P-5500-2 magnet is at least 12 mm (➥ Fig. 3-3).*

BTL5-P-4500-1 magnet, special features: Multiple magnets on the same transducer can be turned on and off individually (PLC control signal).

The stroke range is offset 4 mm towards the BTL connector/cable (➥ Fig. 3-4).

3 Installation (cont.)

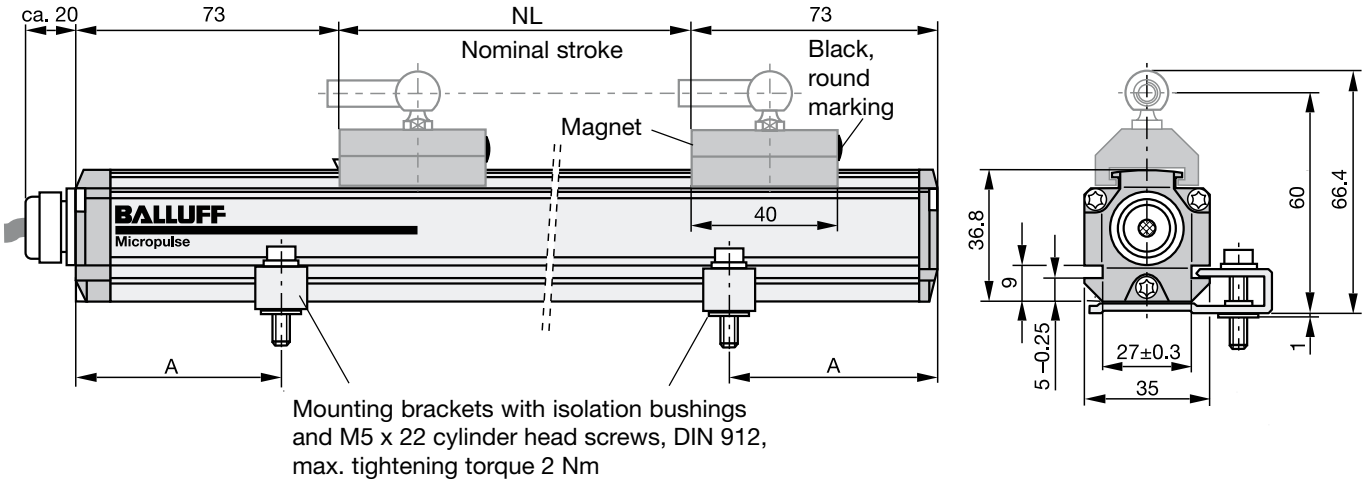

Fig. 3-5: Dimensional drawing (BTL5...P-KA transducer with captive magnet BTL5-F-2814-1S)

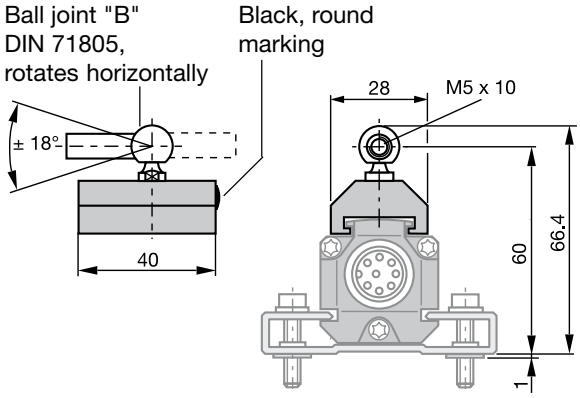

Fig. 3-6: BTL5-F-2814-1S magnet

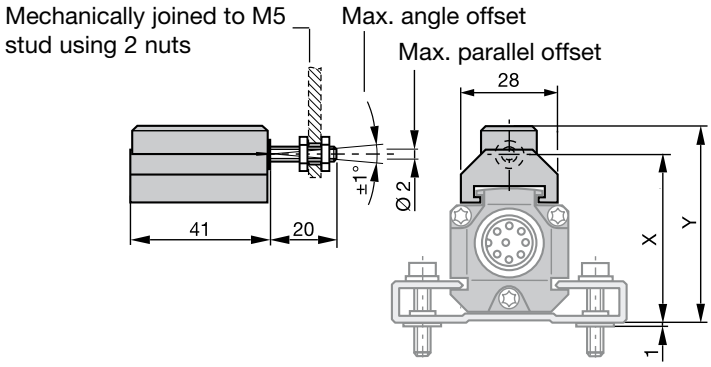

BTL5-M-2814-1S: X = 48.5 Y = 57
BTL5-N-2814-1S: X = 51 Y = 59.5

Fig. 3-7: BTL5-M/N-2814-1S magnet

3.3 Captive magnets

Lateral forces are to be avoided when using captive magnets (➥ Figs. 3-6 and 3-7). Connections are required here which permit the corresponding degree of freedom with respect to the direction of movement of the magnet along the stroke range. It is assumed that the BTL5-F-2814-1S magnet is connected to the machine member using a connecting rod. The BTL2-GS10...A connecting rod (➥ Fig. 3-8) is available as an accessory (please indicate length LG when ordering).

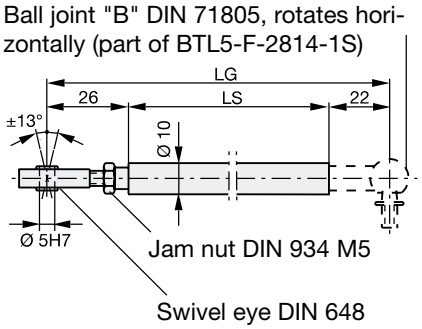

Fig. 3-8: BTL2-GS10-_ _ _ _-A connecting rod

4 Wiring

Output signals

Pin	Cable	BTL5-A_1	-C_0	-C_7	-E_0	-E_7	-G_1
1	YE yellow	not used ③	0...20 mA	20...0 mA	4...20 mA	20...4 mA	not used ③
2	GY grey	0 V ①					
3	PK pink ②	10...0 V	10...0 V	10...0 V	10...0 V	10...0 V	10...–10 V
4	not used						
5	GN green ②	0...10 V	0...10 V	0...10 V	0...10 V	0...10 V	–10...10 V

Supply voltage (external)

Pin	Cable	BTL5-A/C/E/G1_	BTL5-A/C/E/G2_
6	BU blue	GND ① ④	GND ① ④
7	BN brown	+24 V	+15 V
8	WH white	do not connect	–15 V

Table 4-1: Wiring assignment

① The analog transducer outputs are potential-free. When connecting to a module with non-potential-free inputs, ground loops may cause erroneous signals. Avoid this by defeating the potential-free function in the transducer: jumper Pin 2 and Pin 6 in the female connector (➥ Fig. 4-2).

② A small voltage difference (< 10 mV) appears between pin 3 and 5 due to seperate output drivers.

③ Unused leads can be tied to GND on the control side, but they must never be connected to the shield.

④ Reference GND for supply voltage and EMC!

Note the following when making electrical connections:

⚠ *System and control cabinet must be at the same ground potential.*

To ensure electromagnetic compatibility (EMC), which Balluff verifies by the CE Marking, the following points must be strictly observed.

BTL transducer and the processor/control must be connected using shielded cable.

Shielding: Copper filament braided, 80% coverage.

The shield must be tied to the connector housing in the BKS connector (➥ Fig. 4-1); see instructions accompanying the connector.

In the cable version the cable shield is connected to the housing in the PG fitting.

The cable shield must be grounded on the control side, i.e., connected to the protection ground.

Pin assignments can be found in ➥ Table 4-1. Connections on the controller side may vary according to the controller and configuration used.

When routing the cable between the transducer, controller and power supply, avoid proximity to high voltage lines to prevent noise coupling. Especially critical is inductive noise caused by AC harmonics (e.g. from phase-control devices), against which the cable shield provides only limited protection.

Cable length max. 20 m; Ø 6 to 8 mm. Longer lengths may be used if construction, shielding and routing are such that external noise fields will have no effect on signal integrity.

straignt
BKS-S 32M-00
No. 99-5672-19-08
(Binder part no.)

right-angle
BKS-S 33M-00
No. 99-5672-78-08

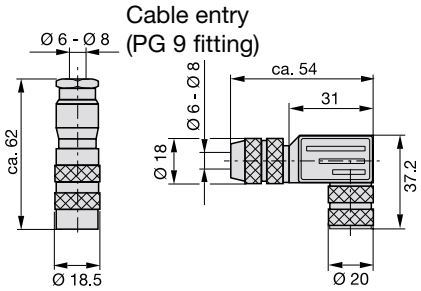

Fig. 4-1: Connector (optional)

BKS connector, view towards solder side of female BKS-S 32M-00 or BKS-S 33M-00

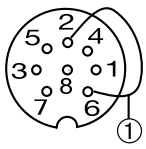

Fig. 4-2: Pin assignments BKS, connector type BTL

4 Wiring (cont.)

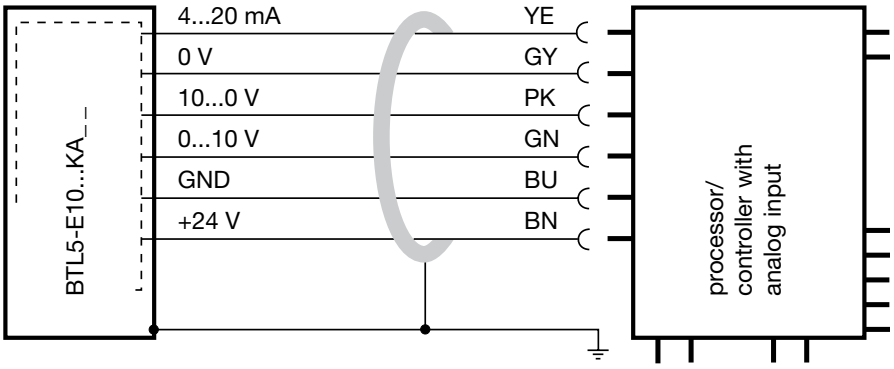

Fig. 4-3: BTL5-E10...KA _ _ with processor card/controller, wiring example

5 Startup

5.1 Check connections

Although the connections are polarity reversal protected, components can be damaged by improper connections and overvoltage. Before you apply power, check the connections carefully.

5.2 Turning on the system

Note that the system may execute uncontrolled movements when first turned on or when the transducer is part of a closed-loop system whose parameters have not yet been set. Therefore make sure that no hazards could result from these situations.

If there is no magnet in the stroke range, the integrated function monitor provides the following defined output signals:

Voltage output 10 V
increasing decreasing
$U_A > 10$ V < 0 V

Current output 20 mA
increasing decreasing
$I_A \geq 20$ mA 0 mA for BTL5-C...
$I_A \geq 20$ mA ≤ 4 mA for BTL5-E...

5.3 Check output values

After replacing or repairing a transducer, it is advisable to verify the values for the start and end position of the magnet in manual mode. If values other* than those present before the replacement or repair are found, a correction should be made.

* Transducers are subject to modification or manufacturing tolerances.

5.4 Check functionality

The functionality of the transducer system and all its associated components should be regularly checked and recorded.

5.5 Fault conditions

When there is evidence that the transducer system is not operating properly, it should be taken out of service and guarded against unauthorized use.

5.6 Noise elimination

Any difference in potential - current flow - through the cable shield should be avoided. Therefore:

- Use the isolation bushings, and
- Make sure the control cabinet and the system in which the BTL5 is contained are at the same ground potential.

6 Versions (indicated on part label)

Supply voltage 1 = DC 24 V, 2 = DC ±15 V
Electr. connection S32: with connector, KA05: with 5 m cable

BTL5-A11-M0450-P-S32

Profile form factor

Nom. length (4 digits), M = metric in mm
U = inches in 1/10 inch

Micropulse Linear Transducer

Analog interface:

Voltage output	A_1 = 10 ... 0 V and 0 ... 10 V	
	G_1 = 10 ... –10 V and –10 ... 10 V	
Current output	C_0 = 0 ... 20 mA	E_0 = 4 ... 20 mA
	C_7 = 20 ... 0 mA	E_7 = 20 ... 4 mA

7 Technical Data

The following are typical values at DC 24 V and 25 °C. Fully operational after power-up, with full accuracy after warm-up. Values are with BTL5-P-3800-2, BTL5-P-4500-1 or BTL5-P-5500-2 magnet held at a constant offset from the transducer or with captive magnet BTL5-F/M/N-2814-1S (see magnet section for exceptions):

	Resolution	≤ ±2 µm
+	Hysteresis	≤ ±4 µm
=	Repeatability	≤ ±6 µm
≙	Voltage	≤ ±0.1 mV
≙	Current	≤ ±0.16 µA

Sampling rate $f_{Standard}$ = 1 kHz

Non-linearity:

Nom. length	≤ 500 mm	> 500 mm
	±100 µm	±0.02 % FS

Temperature coefficient
Voltage output:
[150 µV/K + (5 ppm/K ∗ P ∗ V/NL)] ∗ ΔT
Current output:
[0.6 µA/K + (10 ppm/K ∗ P ∗ I/NL)] ∗ ΔT
V = output voltage range in [V]
I = output current range in [mA]
NL = nominal length in [mm]
ΔT = temperature difference in [K]
P = magnet position in [mm]
Shock loading 100 g/6 ms
per IEC 68-2-27 [1]
Continuous shock 100 g/2 ms
per IEC 68-2-29 [1]
Vibration 12 g, 10 to 2000 Hz
per IEC 68-2-6 [1]

[1] Individual specifications as per Balluff factory standard

7.1 Dimensions, weights, ambient conditions

Nominal length ≤ 4000 mm
Dimensions ➥ pages 4 and 5
Weight approx. 1.4 kg/m
Housing anodized aluminum
Housing attachment
Mounting clamps with isolation bushings and screws
Operating temp. –40 °C to +85 °C
Humidity < 90%, non-condensing
Protection class per IEC 529 IP 67 when closed up

7.2 Supply voltage (external)

Regulated supply voltage
BTL5-_1... DC 20 to 28 V
Ripple ≤ 0.5 V_{pp}
BTL5-_2... DC ±14.7 to ±15.3 V
Current draw ≤ 150 mA
Inrush ≤ 3 A/0.5 ms
Polarity reversal protection built-in
Overvoltage protection
Transzorb diodes
Electric strength
GND to housing 500 V

7.3 Outputs

BTL5-A...
Output voltage 0...10/10...0 V
Load current ≤ 5 mA
Ripple ≤ 5 mV
BTL5-G...
Output voltage –10...10/10... –10 V
Load current ≤ 5 mA
Ripple ≤ 5 mV
BTL5-C...
Output current 0...20/20...0 mA
Load resistance ≤ 500 Ohm
BTL5-E...
Output current 4...20/20...4 mA
Load resistance ≤ 500 Ohm

7.4 Connection to processor

Analog interface:
With S32 connector for shielded cable (max. length, see "Wiring"), diameter 6 to 8 mm,
or with integral cable KA05 (5 m long)

7.5 Included in shipment

Transducer ➥ Fig. 3-1
or ➥ Fig. 3-5
(with mounting brackets, isolation bushings and screws, not incl. magnet)

7.6 Magnets
(order separately)

Spacing, offset and installation
➥ pages 4 and 5
Operating temp. –40 °C to +85 °C

BTL5-P-3800-2 ➥ Fig. 3-2
Weight approx. 12 g
Housing plastic
BTL5-P-5500-2 ➥ Fig. 3-3
Weight approx. 40 g
Housing plastic
Non-linearity:

Nom. length	≤ 500 mm	> 500 mm
	±150 µm	±0.03 % FS

BTL5-P-4500-1 ➥ Fig. 3-4
Weight approx. 90 g
Housing plastic
Operating temp. –40 °C to +60 °C
BTL5-F-2814-1S ➥ Fig. 3-6
Weight approx. 28 g
Housing plastic
BTL5-M-2814-1S ➥ Fig. 3-7
Weight approx. 32 g
Housing anodized aluminum
Contact surface plastic
BTL5-N-2814-1S ➥ Fig. 3-7
Weight approx. 35 g
Housing anodized aluminum
Contact surface plastic

Control arm (optional)
BTL2-GS10-_ _ _ _-A
Aluminum, dimensions ➥ Fig. 3-8
Various standard lengths LG available (please specify when ordering)

7.7 Accessories (optional)

Connectors ➥ Fig. 4-1

No. 817 112 E • Edition 0105; Specifications subject to change • Replaces edition 0101.